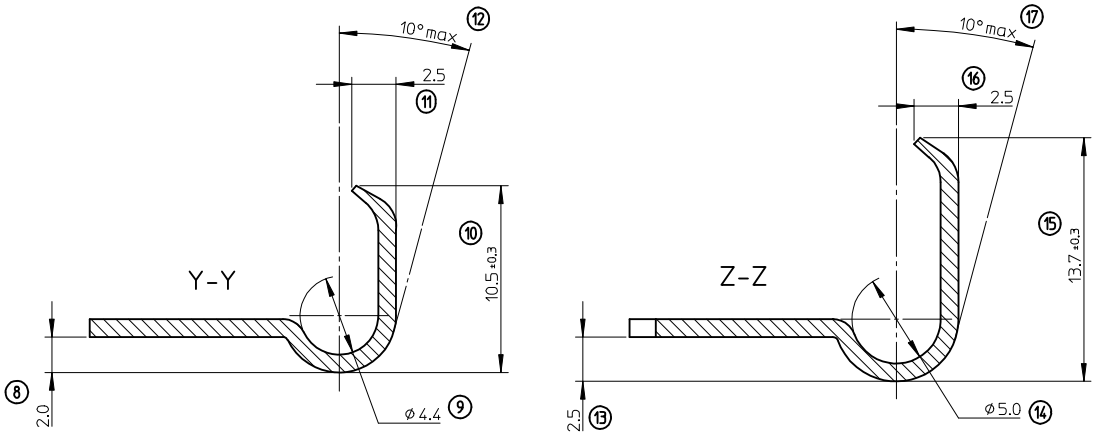

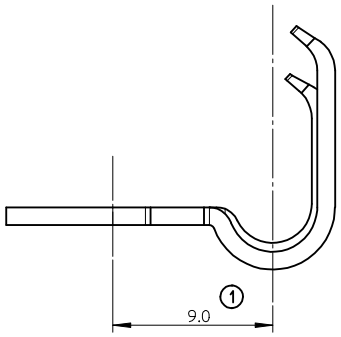

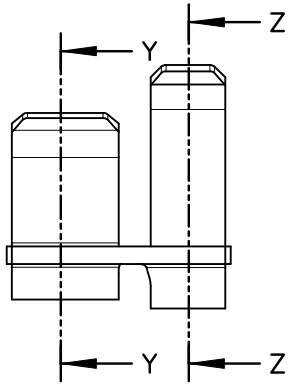

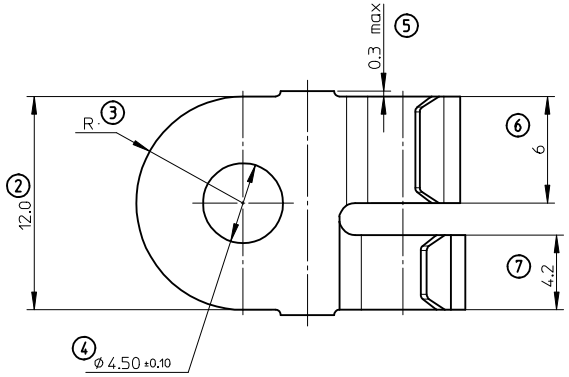

MODIFICATIONS

REV.	DESCRIPTIONS	NAME	DATE
D	DRAWING REDRAW FROM THE LABINAL DRAWING DD.12103... REVC DELETE P/N DD61210320 , P/N DD412103B20 (0988721049) AND P/N DD512103B20 (0988721039) REVIEW P/N FROM DD412103B20 TO 0988721059	VJ	2013/08/20

- CRIMPING: SEE AS-98872-001
- MATERIAL: PRE-TIN PLATED BRASS; THICKNESS: 1mm

UNREELING DIRECTION

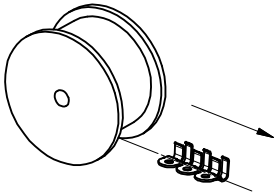

PITCH

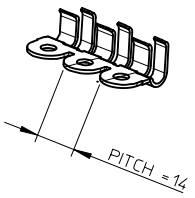

DRAWING REDO
EC NO: G2014-0027
DRWN:VJOUAS 2013/08/20
CHKD:JDUCLOS 2013/08/21
APPR:OPLESSIS 2013/09/12
DESCRIPTION
REV D

GENERAL TOLERANCES (UNLESS SPECIFIED)	mm	INCH
4 PLACES	± ---	± ---
3 PLACES	± ---	± ---
2 PLACES	± 0.2	± ---
1 PLACE	± 0.2	± ---
0 PLACE	± 0.2	± ---
ANGULAR ± 2 °		

DRAFT WHERE APPLICABLE MUST REMAIN WITHIN DIMENSIONS

DIMENSION STYLE: MM ONLY
SCALE: 5:1
DESIGN UNITS: METRIC
FIRST ANGLE PROJECTION

DRAWN BY: VJOUAS DATE: 2013/08/20
CHECKED BY: JDUCLOS DATE: 2013/08/21
APPROVED BY: OPLESSIS DATE: 2013/09/12

TITLE: FLAG RING TERM RIGHT 4X12X1 2-7 MM^2

molex

MATERIAL NO.: 0988721059
DOCUMENT NO.: SD-98872-001
SHEET NO.: 1 OF 1
SIZE: A2

THIS DRAWING CONTAINS INFORMATION THAT IS PROPRIETARY TO MOLEX INCORPORATED AND SHOULD NOT BE USED WITHOUT WRITTEN PERMISSION

tb_frame_A2_P_AM_F
Rev. G 2012/01/11

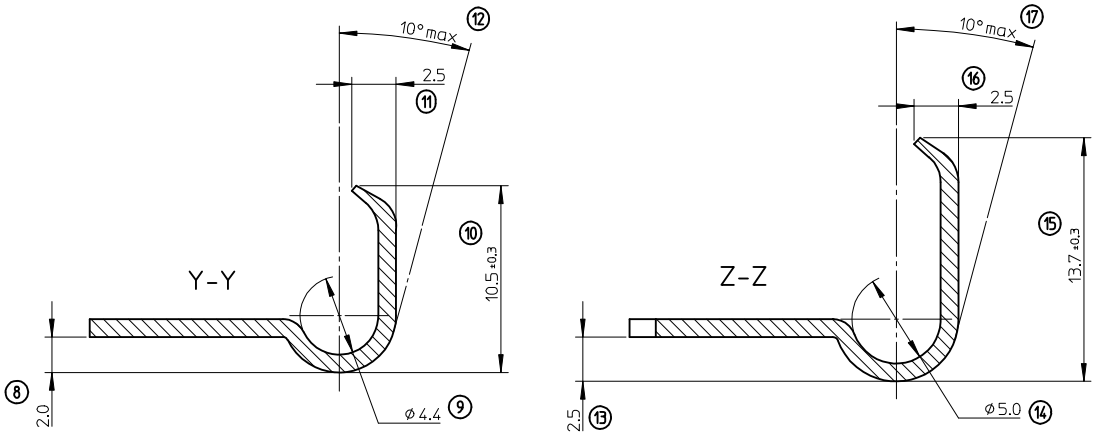

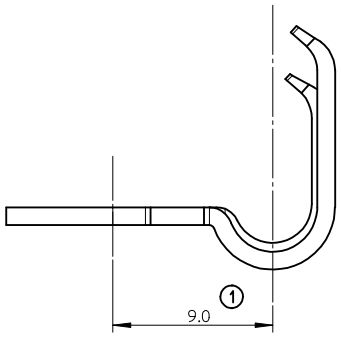

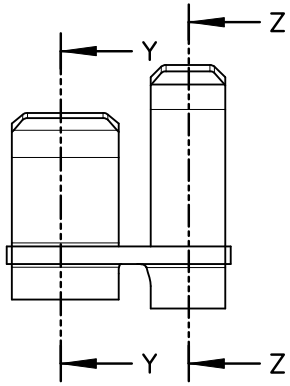

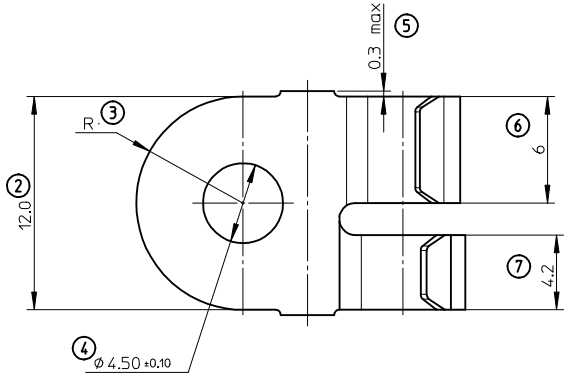

MODIFICATIONS

REV.	DESCRIPTIONS	NAME	DATE
D	DRAWING REDRAW FROM THE LABINAL DRAWING DD.12103... REVC DELETE P/N DD61210320 , P/N DD412103B20 (0988721049) AND P/N DD512103B20 (0988721039) REVIEW P/N FROM DD412103B20 TO 0988721059	VJ	2013/08/20

- CRIMPING: SEE AS-98872-001
- MATERIAL: PRE-TIN PLATED BRASS; THICKNESS: 1mm

UNREELING DIRECTION

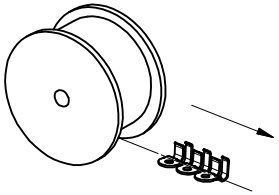

PITCH

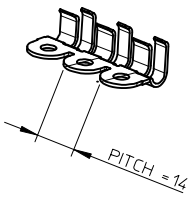

DRAWING REDO
EC NO: G2014-0027
DRWN:VJOUAS 2013/08/20
CHKD:JDUCLOS 2013/08/21
APPR:OPLESSIS 2013/09/12
DESCRIPTION
REV D

GENERAL TOLERANCES (UNLESS SPECIFIED)	mm	INCH
4 PLACES	± ---	± ---
3 PLACES	± ---	± ---
2 PLACES	± 0.2	± ---
1 PLACE	± 0.2	± ---
0 PLACE	± 0.2	± ---
ANGULAR ± 2 °		

DRAFT WHERE APPLICABLE MUST REMAIN WITHIN DIMENSIONS

DIMENSION STYLE: MM ONLY
SCALE: 5:1
DESIGN UNITS: METRIC
FIRST ANGLE PROJECTION

DRAWN BY: VJOUAS DATE: 2013/08/20
CHECKED BY: JDUCLOS DATE: 2013/08/21
APPROVED BY: OPLESSIS DATE: 2013/09/12

TITLE: FLAG RING TERM RIGHT 4X12X1 2-7 MM^2

molex

MATERIAL NO.: 0988721059
DOCUMENT NO.: SD-98872-001
SHEET NO.: 1 OF 1
SIZE: A2

THIS DRAWING CONTAINS INFORMATION THAT IS PROPRIETARY TO MOLEX INCORPORATED AND SHOULD NOT BE USED WITHOUT WRITTEN PERMISSION

tb_frame_A2_P_AM_F
Rev. G 2012/01/11