SPECIFICATIONS		
PARAMETERS	VALUES	UNITS
RATED INPUT POWER	0.01	W
MAX INPUT POWER	0.02	W
IMPEDANCE	160 ± 20%	OHM
OUTPUT SPL @ 0.01W/1cm (AT 1.0 kHz)	98 ± 2	dBA
DISTORTION (MAX.)	5%	-
RESONANT FREQUENCY	300 ± 15%	Hz
FREQUENCY RANGE	200 ~ 3400	Hz
HOUSING MATERIAL	ABS	-
CONE MATERIAL	MYLAR	-
MAGNET MATERIAL	Nd-Fe-B	-
OPERATING TEMPERATURE	-20 ~ +60	°C
WEIGHT	30	grams

THIS DOCUMENT CONTAINS DATA PROPRIETARY TO PROJECTS UNLIMITED, INC. ANY USE OR REPRODUCTION, IN ANY FORM, WITHOUT PRIOR WRITTEN PERMISSION OF PROJECTS UNLIMITED, INC. IS PROHIBITED.
©2005, Projects Unlimited Inc.

REVISION HISTORY			
LTR	DESCRIPTION	DATE	APPROVED
-	RELEASED FROM ENGINEERING	01/26/2006	
A	REVISED TO INVENTOR 3-D DRAWING TEMPLATE	04/02/2008	B.R.

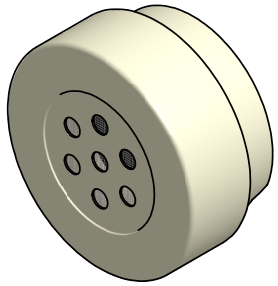

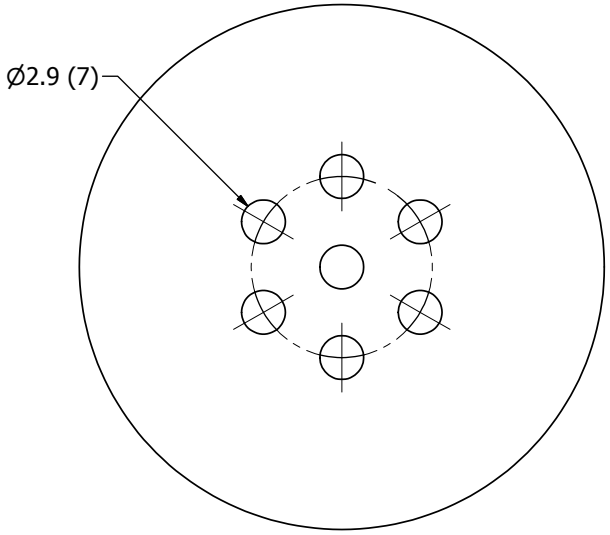

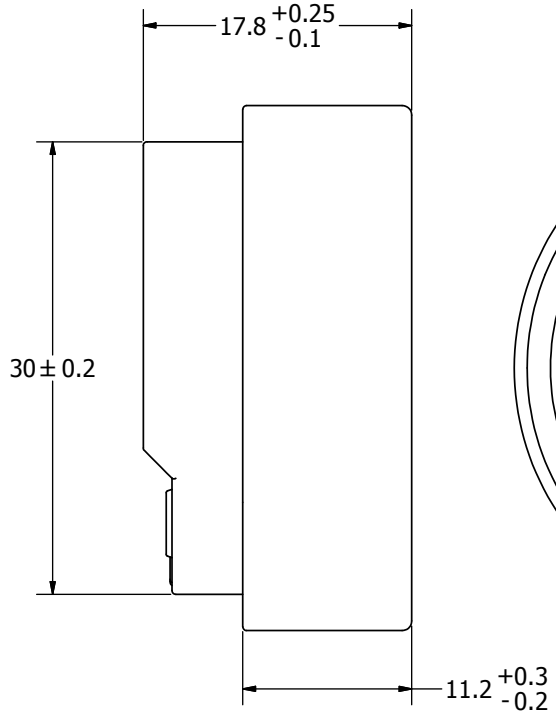

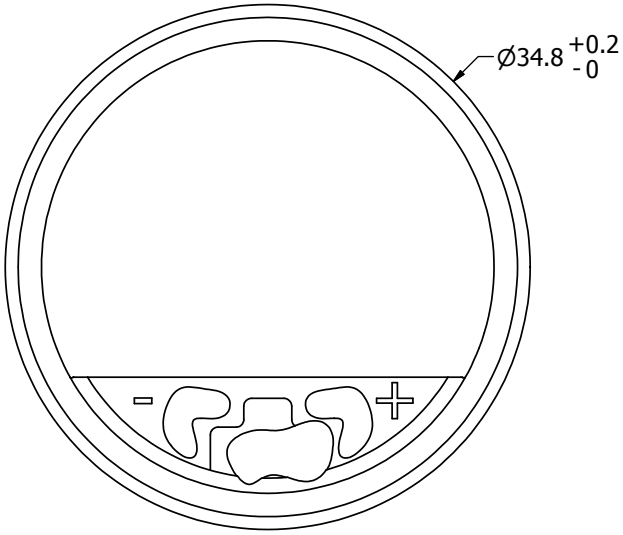

NOTES:

1. ALL DIMENSIONS ARE IN MILLIMETERS.
2. SPECIFICATIONS SUBJECT TO CHANGE OR WITHDRAWL WITHOUT NOTICE.
3. THIS PART IS RoHS 2002/95/EC COMPLIANT.

UNLESS OTHERWISE SPECIFIED: DIMENSIONS ARE IN MILLIMETERS, TOLERANCES ARE ±0.5 AND ANGLES ARE ±3°.	SIZE A3	Designed by	Date	Checked by	Date	Approved by	Date	Drawn Date
		J.A.F.	1/26/2006	B.R.	1/27/2006	E.P.	1/27/2006	1/27/2006
AR035160MR-R.idw		pui audio A Division of Projects Unlimited		AR035160MR-R				
				Receiver			Edition -	Sheet 1 / 1