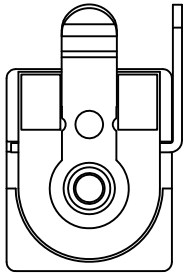

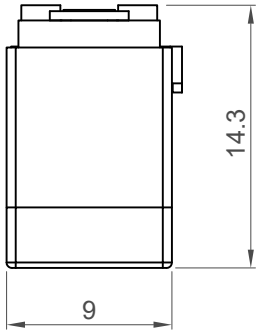

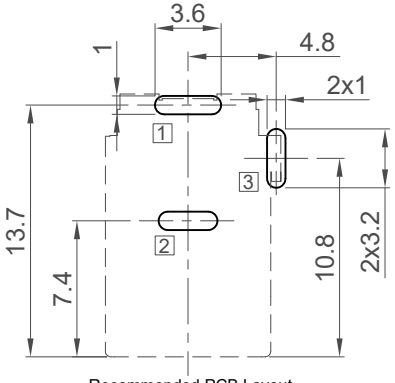

Recommended PCB Layout
(Tolerance:±0.05mm)
Component Outline

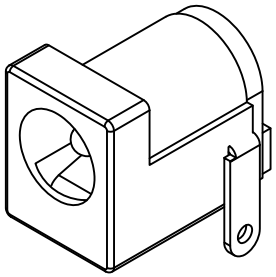

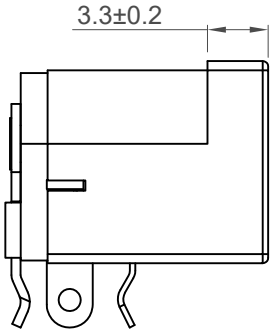

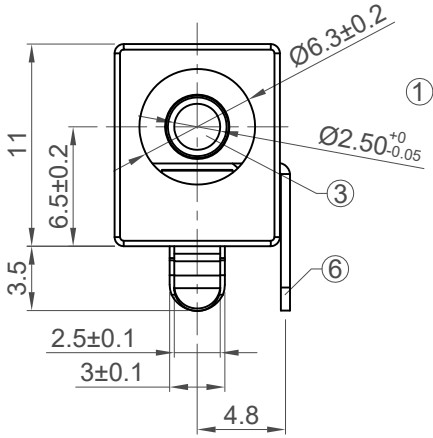

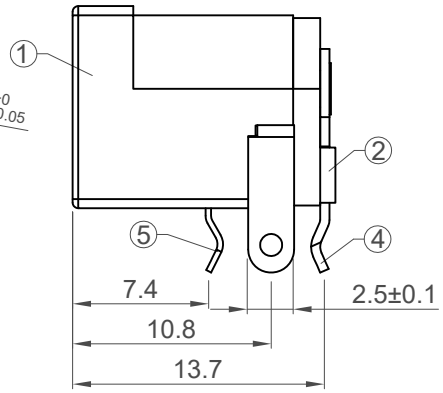

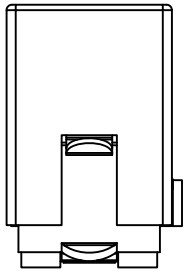

Mating Plug
(Reference)

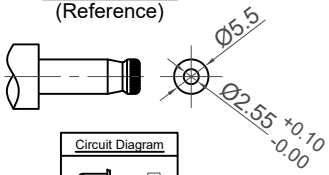

Circuit Diagram

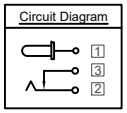

Terminal Number

Specifications 规格

Electrical 电气规格
- Voltage rating 电压额定值: 20 V DC
- Current Rating 电流额定值: 5 Amp
- Insulation Resistance 绝缘电阻值: 100 MΩ min.
- Dielectric Withstanding 耐电压: 500 V AC
- Contact Resistance 接触电阻值: 30 mΩ max.

Mechanical & Environmental 机械 & 环境
- Operating Temperature 工作温度: -20°C to +70°C
- Durability 耐久性: 5,000 cycles min.

No.	Description	Material	Q'ty
1	Housing	PBT, UL94 V-0	1
2	Cover	PBT, UL94 V-0, Black	1
3	Centre Pin 1	Brass, Cu-Sn/Nickel plating	1
4	Centre Pin Terminal 1	Brass, T=0.50mm, Silver plating	1
5	Tip Spring 2	Phosphor Bronze, T=0.30mm, Silver plating	1
6	Shunt Terminal 3	Brass, T=0.50mm, Silver plating	1

Ordering Grid

DCJ250 — 10 — A — K1 — K Request Samples and Quotation

Circuit Diagram
A = 2 Conductors/3 Contacts

Insulator Colour
K1 = Black ***(Standard)***
W1 = White (0100) B1 = Blue (0037)
G1 = Grey (0292) G2 = Grey (0228)
V1 = Green (0247) V2 = Green (0116)
Y1 = Yellow (0039)

Packing
K = Bag
(500 per bag)

Part Number	Product Description
DCJ250-10	DC Power Jack, Thru-Hole, Horizontal, w/Locating Pegs Ø2.50mm Pin mates with Ø2.55mm Plug
Drawing Date: 11th December 2015	

By	AJO	Tolerances (Except as Noted) Length	Angle	Units: Metric (mm)
Detail	Drawing Release	± 0.3	± 2°	3rd Angle Projection
Revision	A			
Date	11/12/15			

RoHS COMPLIANT 2011/65/EU Deca-BDE

GCT
www.gct.co

Not to Scale	Drawn By AJO	Sheet No. 1/2

Part Number	Pcs/Bag	Bags/Carton	Cartons/Box	Pcs/Carton
DCJ250-10	500	4	4	8000

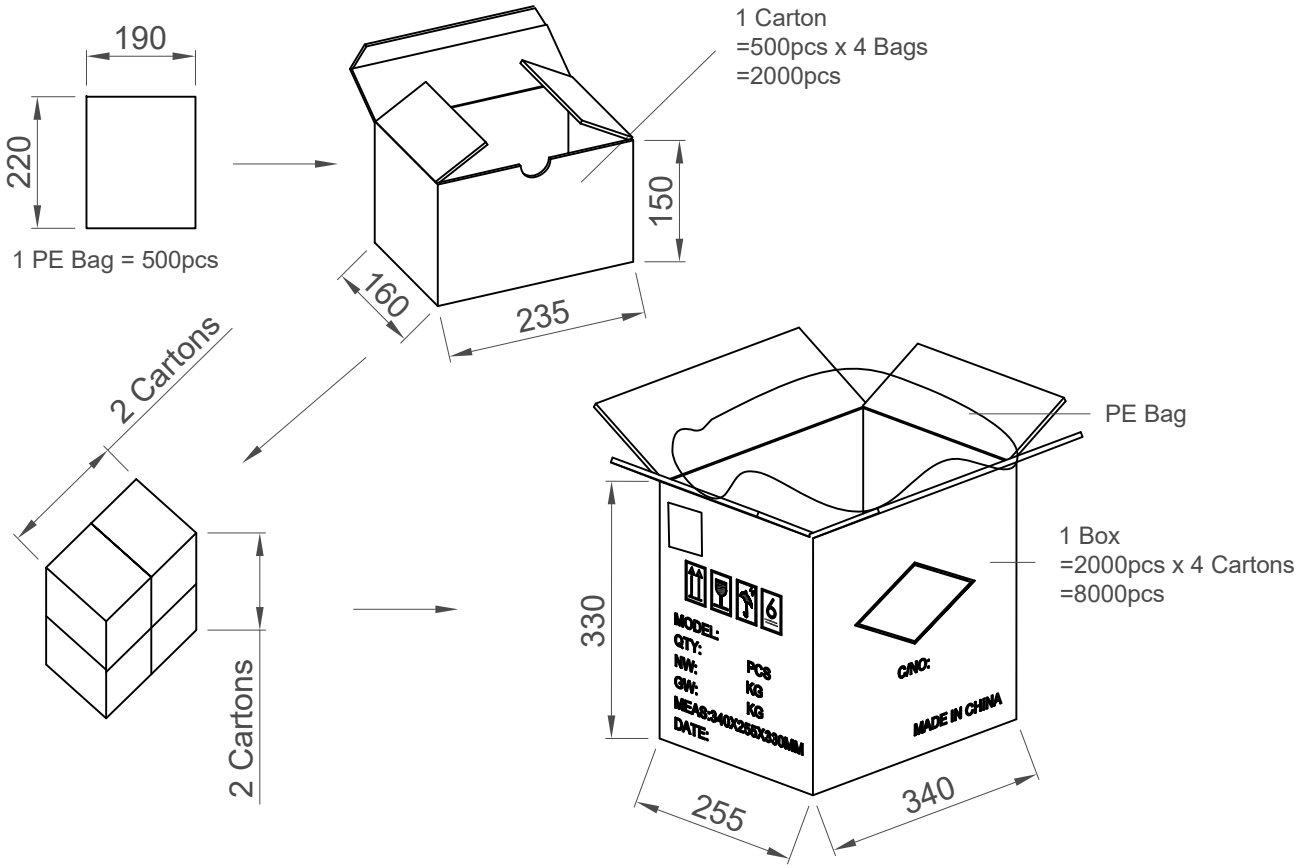

Part Number		Product Description					
DCJ250-10		DC Power Jack, Thru-Hole, Horizontal, w/Locating Pegs Ø2.50mm Pin mates with Ø2.55mm Plug					
Drawing Date							
11th December 2015							
By	AJO	Tolerances (Except as Noted) Length	Angle	Units: Metric (mm)	RoHS COMPLIANT 2011/65/EU Deca-BDE	© This drawing is confidential and copyright of Global Connector Technology, Ltd (GCT). This drawing must not be copied or disclosed without written consent. E & OE	GCT www.gct.co
Detail	Drawing Release	± 0.3	± 2°	3rd Angle Projection			Not to Scale / Drawn By AJO / Sheet No. 2/2
Revision	A						
Date	11/12/15						